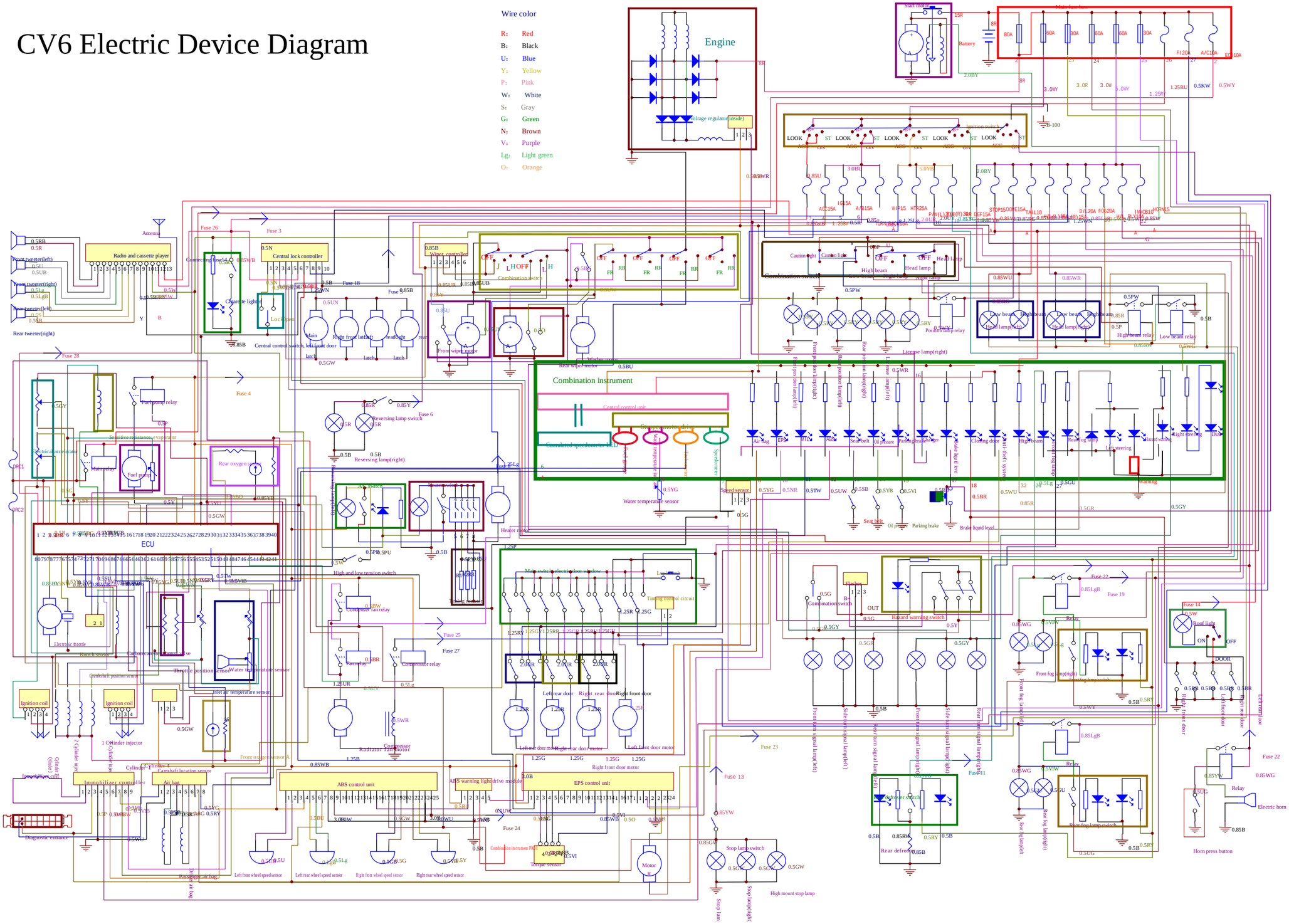CV6 Electric Device Diagram